OpenDRIVE® 1.8.1, Static Road Network Description, 2024-11-21

13.4 Object skeleton

Objects may use a skeleton polyline to describe its shape more closely within this objects bounding box. This skeleton can define the appropriate parts of an object by a series of points with either a radius or a width and height. It also adds the possibility to define an @intersectionPoint attribute in order to describe where that object touches the road or ground surface.

Only objects of certain values of the @type attribute shall be described with these skeleton polylines.

The `<skeleton>` element serves as a wrapper for the `<polyline>` element that contains further elements to describe the different points of that polyline.

Elements in UML model

`<skeleton>` element

In ASAM OpenDRIVE, the skeleton of objects is represented by the `<skeleton>` element within the `<object>` element.

```
UML class:  t_road_objects_object_skeleton
XML tag:    <skeleton> (Multiplicity: 0..1)
Introduced: 1.8.0
```

Wrapper for the object polylines, that can be used to describe the actual shape inside the bounding box more closely

`<polyline>` element

In ASAM OpenDRIVE, the polyline of a skeleton is represented by the `<polyline>` element within the `<skeleton>` element.

```
UML class:  t_road_objects_object_skeleton_polyline
XML tag:    <polyline> (Multiplicity: 1..*)
```

```
Introduced: 1.8.0
```

Defines a series of points relative to the road reference line.

An `<polyline>` element shall be followed by either two or more `<vertexRoad>` elements or by two or more `<vertexLocal>` elements.

Table 91. Attributes of the <polyline> element

Name	Type	Use	Introduced	Description
`id`	positiveInteger	optional	1.8.0	ID of the polyline. Must be unique within one object.

Rules

The following rules apply to `<skeleton>` elements:

- asam.net:xodr:1.8.0:road.object.skeleton.polyline_followed_by_vertex: A `<polyline>` element shall be followed by either two or more `<vertexRoad>` elements or by two or more `<vertexLocal>` elements.
- The `<polyline>` element may use the @intersectionPoint attribute for its point to specify where that object intersects with the ground.
- asam.net:xodr:1.8.0:road.object.skeleton.points_inside_box: All points of the `<polyline>` element must be located inside the bounding box, including their local width and height or radius.
- asam.net:xodr:1.8.0:road.object.skeleton.points_requirements: All points of the `<polyline>` element are connected with a straight line between the `<vertexRoad>` or `<vertexLocal>` elements and the specified @radius or @width and @height attributes of each point are perpendicular to this line.{rule_description}
- Changes in @radius or @width and @height attributes between points of the `<polyline>` element are interpolated linearly.
- asam.net:xodr:1.8.0:road.object.skeleton.use_radius_or_width_length: Each `<polyline>` element shall either use @radius or @width and @length attributes for all of its vertex elements.

Related topics

- Section 13.1, "Introduction to objects"
- Section 13.4.1, " `<vertexRoad>` element"
- Section 13.4.2, " `<vertexLocal>` element"

13.4.1. `<vertexRoad>` element

`<vertexRoad>` elements are mandatory elements inside a `<polyline>` element. They are used to describe a more detailed form of objects inside their bounding box. They are mutually exclusive with `<vertexLocal>` elements. `<vertexRoad>` elements describe a skeleton polyline of objects relative to the road reference line with their s- and t-coordinates.

The shape of a polyline may be described by the object's local width and length or radius at each `<vertexRoad>` point and the `<vertexRoad>` point's difference in height @dz relative to the road reference line.

Elements in UML model

`<vertexRoad>` element

In ASAM OpenDRIVE, polyline points that use s- and t-coordinates are represented by the `<vertexRoad>` element within the `<polyline>` element.

```
UML class:  t_road_objects_object_skeleton_polyline_vertexRoad
XML tag:    <vertexRoad> (Multiplicity: 2..*)
Introduced: 1.8.0
```

Defines a point on the object's polyline in road coordinates. `<vertexRoad>` can use either radius or length/width within one `<polyline>` element.

Table 92. Attributes of the <vertexRoad> element

Name	Type	Use	Unit	Introduced	Description
`dz`	double	required	m	1.8.0	dz of the polyline point relative to road reference line parallel to z.
`id`	positiveInteger	optional		1.8.0	ID of the vertex point. Must be unique within one polyline.
`intersectionPoint`	t_bool	optional		1.8.0	Vertex point is intersecting the ground. "false" is used as default.
`radius`	double	optional	m	1.8.0	Local radius of the object at this vertex point, along the polyline
`s`	t_grEqZero	required	m	1.8.0	s-coordinate of the corner
`t`	double	required	m	1.8.0	t-coordinate of the corner

XML example

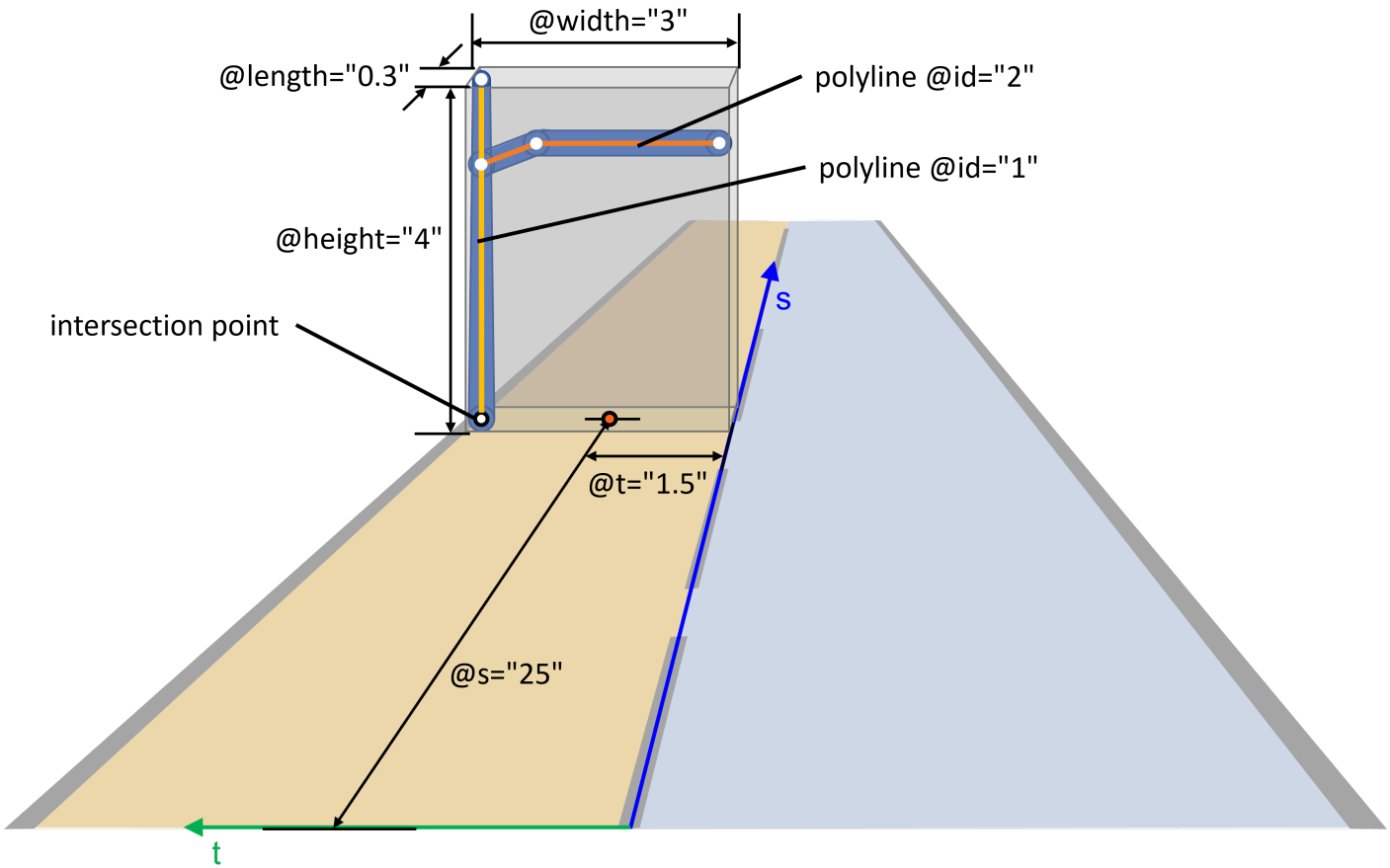

Figure 117. Example of the bounding box and skeleton of a traffic light pole

Figure 117 shows a traffic light pole with an extension arm that spans over the street which can be described with two separate polylines, one for the main pole that defines an intersection point and one for the extension arm.

```xml
<object type="pole"
        subtype="trafficLight"
        name=""
        id="4000002"
        s="25.0"
        t="1.5"
        zOffset="0.00"
        roll="0"
        pitch="0"
        validLength="0"
        orientation="none"
        height="4"
        length="0.3"
        width="3"
        dynamic="no"
        hdg="0">
    <skeleton>
        <polyline id="1">
            <vertexRoad s="25.0" t="2.8" dz="0.0" radius="0.15" id="0" intersectionPoint="true"/>
            <vertexRoad s="25.0" t="2.8" dz="4.0" radius="0.10" id="1"/>
        </polyline>
        <polyline id="2">
            <vertexRoad s="25.0" t="2.8" dz="3.0" radius="0.15" id="0"/>
            <vertexRoad s="25.0" t="2.15" dz="3.25" radius="0.15" id="1"/>
            <vertexRoad s="25.0" t="0.0" dz="3.25" radius="0.15" id="2"/>
        </polyline>
    </skeleton>
</object>
```

```
3
2
4
2
5
2
6
2
7
2
8
```

Rules

The following rules apply to `<vertexRoad>` elements:

- asam.net:xodr:1.8.0:road.object.skeleton.vertex_road.element_min_amount: There shall be at least two `<vertexRoad>` elements inside a `<polyline>` element.
- asam.net:xodr:1.8.0:road.object.skeleton.vertex_road.polyline_elements: There shall be no `<vertexLocal>` element next to a `<vertexRoad>` element inside the same `<polyline>` element.
- asam.net:xodr:1.8.0:road.object.skeleton.vertex_road.no_radius_with_width_length: `<vertexRoad>` elements shall not use @radius together with @width and @length attributes in one `<polyline>` element.
- Values of @radius or @width and @length attributes will be interpolated linearly between two `<vertexRoad>` points.

Related topics

- Section 13.1, "Introduction to objects"
- Section 13.4.2, “ `<vertexLocal>` element”

13.4.2. <vertexLocal> element

<vertexLocal> elements are mandatory elements inside an <polyline> element. They are used to describe a more detailed form of objects inside their bounding box. They are mutually exclusive with <vertexRoad> elements. <vertexLocal> describe a skeleton polyline of objects within a local u/v coordinate system.

The polyline shape of an object may be described by the object's local width and length or radius at each <vertexLocal> point.

Elements in UML model

<vertexLocal> element

In ASAM OpenDRIVE, polyline points that use local u- and v-coordinates are represented by the <vertexLocal> element within the <polyline> element.

```
UML class:  t_road_objects_object_skeleton_polyline_vertexLocal
XML tag:    <vertexLocal> (Multiplicity: 2..*)
Introduced: 1.8.0
```

Defines a vertex point on the object polyline relative to the object pivot point in local u/v-coordinates. The insertion point and the orientation of the object are given by the @s, @t, @zOffset and @hdg attributes of the element. <vertexLocal> can use either radius or length/width within one <polyline> element.

Table 93. Attributes of the <vertexLocal> element

Name	Type	Use	Unit	Introduced	Description
id	positiveInteger	optional		1.8.0	ID of the vertex point. Must be unique within one polyline.
intersectionPoint	t_bool	optional		1.8.0	Vertex point is intersecting the ground. "false" is used as default.
radius	double	optional	m	1.8.0	Local radius of the object at this vertex point, along the polyline
u	double	required	m	1.8.0	Local u-coordinate of the vertex point

Name	Type	Use	Unit	Introduced	Description
v	double	required	m	1.8.0	Local v-coordinate of the vertex point
z	double	required	m	1.8.0	Local z-coordinate of the vertex point

XML example

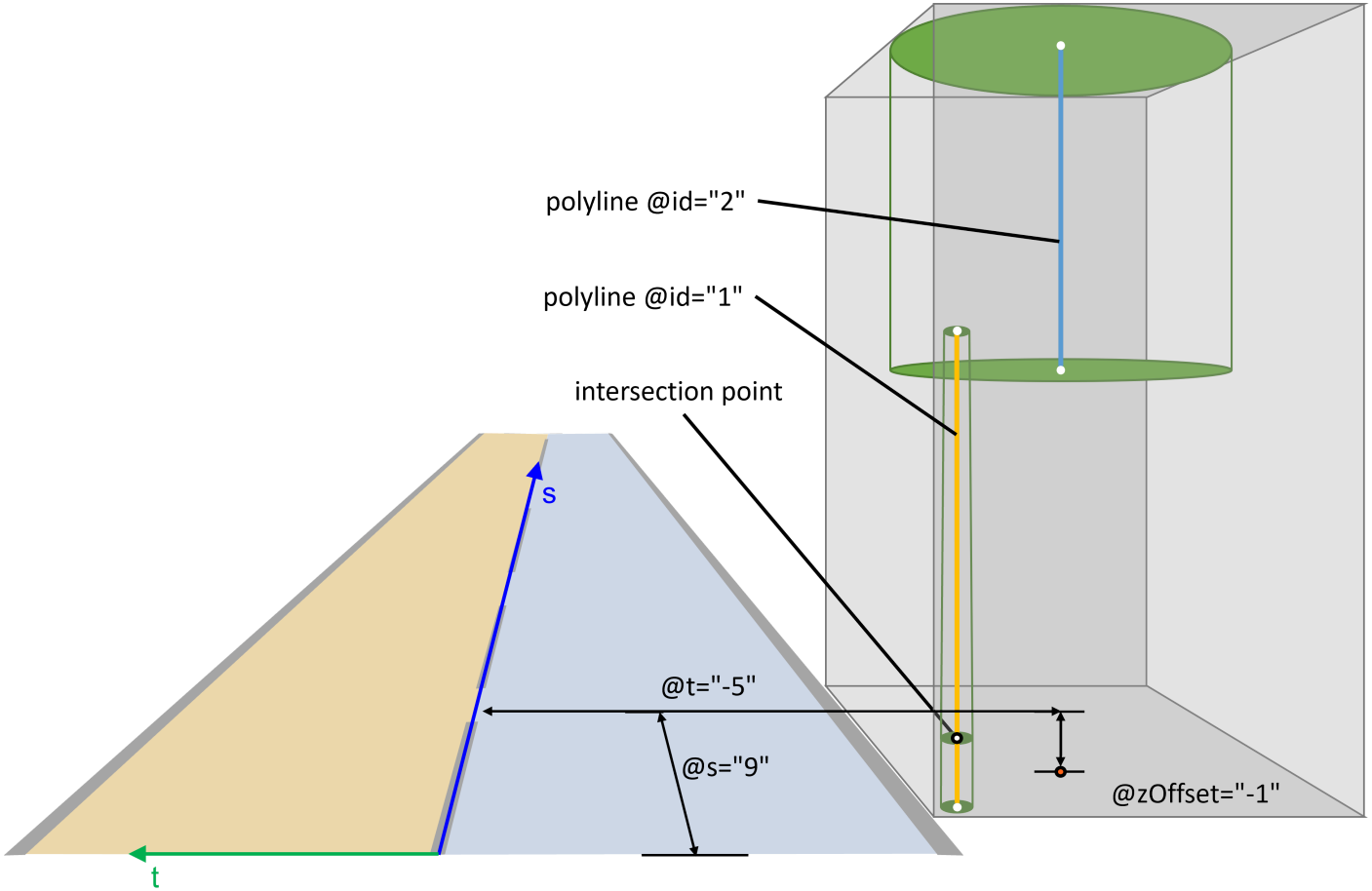

Figure 118. Example of the skeleton of a tree

Figure 118 shows a leaf tree which can be described with two separate polylines, one for the trunk that defines an intersection point and one for the crown.

```xml
<object type="tree"
        subtype="leaf"
        name="leafTree"
        id="6"
        s="9"
        t="-5"
        zOffset="-1.00"
        roll="0"
        pitch="0"
        validLength=""
        orientation="none"
        height="7.50"
        length="4.00"
        width="4.00"
        dynamic="no"
        hdg="0">
    <skeleton>
        <polyline id="1">
            <vertexLocal u="-0.2" v="1.0" z="0" radius="0.15" id="0"/>
            <vertexLocal u="-0.2" v="1.0" z="1.000" radius="0.15" id="1" intersectionPoint="true"/>
            <vertexLocal u="-0.2" v="1.0" z="4.500" radius="0.12" id="2"/>
        </polyline>
        <polyline id="2">
            <vertexLocal u="0.0" v="0.0" z="4.0" radius="2.0" id="0"/>
            <vertexLocal u="0.0" v="0.0" z="7.5" radius="2.0" id="1"/>
        </polyline>
    </skeleton>
</object>
```

```
3
2
4
2
5
2
6
2
7
2
8
```

Rules

The following rules apply to `<vertexLocal>` elements:3

- asam.net:xodr:1.8.0:road.object.skeleton.vertex_local.element_min_amount: There shall be at least two `<vertexLocal>` elements inside an `<polyline>` element.
- There shall be no `<vertexRoad>` element next to a `<vertexLocal>` element inside the same `<polyline>` element.
- asam.net:xodr:1.8.0:road.object.skeleton.vertex_local.vertex_local_elements: `<vertexLocal>` elements shall not use @radius together with @width and @length attributes in one `<polyline>` element.
- asam.net:xodr:1.8.0:road.object.skeleton.vertex_local.liniear_interpolation: Values of @radius or @width and @length attributes will be interpolated linearly between two `<vertexLocal>` points.

Related topics

- Section 13.1, "Introduction to objects"
- Section 13.4.1, “ `<vertexRoad>` element”